Received: 6 December 2021 | Accepted: 27 February 2022

DOI: 10.1111/ene.15329

european journal of neurology
the official journal of the european academy of neurology

ORIGINAL ARTICLE

Relation of sensorimotor and cognitive cerebellum functional connectivity with brain structural damage in patients with multiple sclerosis and no disability

Silvia Tommasin[1] | Viktoriia Iakovleva[1] | Maria Assunta Rocca[2,3,4] | Costanza Giannì[1,5] | Gioacchino Tedeschi[6] | Nicola De Stefano[7] | Carlo Pozzilli[1] | Massimo Filippi[2,3,4,8,9] | Patrizia Pantano[1,5] | the INNI Network

[1]Department of Human Neurosciences, Sapienza University of Rome, Rome, Italy

[2]Neuroimaging Research Unit, Division of Neuroscience, IRCCS San Raffaele Scientific Institute, Milan, Italy

[3]Neurology Unit, IRCCS San Raffaele Scientific Institute, Milan, Italy

[4]Vita-Salute San Raffaele University, Milan, Italy

[5]IRCCS NEUROMED, Pozzilli, Italy

[6]Department of Advanced Medical and Surgical Sciences and MRI-Center "SUN-FISM", University of Campania "Luigi Vanvitelli", Naples, Italy

[7]Department of Medicine, Surgery and Neuroscience, University of Siena, Siena, Italy

[8]Neurorehabilitation Unit, IRCCS San Raffaele Scientific Institute, Milan, Italy

[9]Neurophysiology Service, IRCCS San Raffaele Scientific Institute, Milan, Italy

Correspondence
Silvia Tommasin, Department of Human Neuroscience, Sapienza University of Rome, Viale dell'Università, 30, 00185, Rome, Italy.
Email: silvia.tommasin@uniroma1.it

Funding information
Fondazione Italiana Sclerosi Multipla, Grant/Award Number: FISM2019/S/3

Abstract

Background and purpose: To investigate the relationship between the functional connectivity (FC) of the sensorimotor and cognitive cerebellum and measures of structural damage in patients with multiple sclerosis (MS) and no physical disability.

Methods: We selected 144 relapsing–remitting MS patients with an Expanded Disability Status Scale score of ≤1.5 and 98 healthy controls from the Italian Neuroimaging Network Initiative database. From multimodal 3T magnetic resonance imaging (MRI), including functional MRI at rest, we calculated lesion load, cortical thickness, and white matter, cortical gray matter, and caudate, putamen, thalamic, and cerebellar volumes. Voxel-wise FC of the sensorimotor and cognitive cerebellum was assessed with seed-based analysis, and multiple regression analysis was used to evaluate the relationship between FC and structural damage.

Results: Whole brain, white matter, caudate, putamen, and thalamic volumes were reduced in patients compared to controls, whereas cortical gray matter was not significantly different in patients versus controls. Both the sensorimotor and cognitive cerebellum showed a widespread pattern of increased and decreased FC that were negatively associated with structural measures, indicating that the lower the FC, the greater the tissue loss. Lastly, among multiple structural measures, cortical gray matter and white matter volumes were the best predictors of cerebellar FC alterations.

Conclusions: Increased and decreased cerebellar FC with several brain areas coexist in MS patients with no disability. Our data suggest that white matter loss hampers FC, whereas, in the absence of atrophy, cortical volume represents the framework for FC to increase.

KEYWORDS
cognitive cerebellum, disability, functional magnetic resonance imaging, multiples sclerosis, neural plasticity, sensorimotor cerebellum

This is an open access article under the terms of the Creative Commons Attribution-NonCommercial-NoDerivs License, which permits use and distribution in any medium, provided the original work is properly cited, the use is non-commercial and no modifications or adaptations are made.
© 2022 The Authors. *European Journal of Neurology* published by John Wiley & Sons Ltd on behalf of European Academy of Neurology.

INTRODUCTION

The cerebellum has a recognized role in both motor and cognitive functions [1] due to its numerous connections with the cerebral cortex [2,3]. Cerebellar areas subserving motor functions are distinct from those subserving cognitive functions and are associated with the anterior (i.e., sensorimotor cerebellum [smCb]) and posterior (i.e., cognitive cerebellum [cCb]) lobes, respectively [4].

The cerebellum is one of the major sites affected by multiple sclerosis (MS) from early disease stages [5]. Anterior and posterior cerebellar damage contributes to motor and cognitive disability across MS phenotypes [6–9]. Additionally, several structural measures of brain damage (i.e., T2-hyperintense lesion load and atrophy of cortical deep gray matter [GM]), represent well-known correlates of clinical disability and predictors of neurological impairment worsening [10–12].

In response to structural damage, the brain undergoes changes in functional architecture that can be investigated by functional magnetic resonance imaging (fMRI) [13,14]. Several fMRI studies have shown an association between functional cerebellar abnormalities and either cognitive or physical impairment in patients with relapsing–remitting (RR) and/or secondary progressive forms [15–21]. Patients with MS and no physical disability may show a large variability in cerebellar functional connectivity (FC) alterations, with values either higher or lower than the normal range [19], suggesting that cerebellar FC may represent an individual and variable brain response to tissue damage severity.

The relationship between altered cerebellar FC and brain structural damage in MS is underexplored and difficult to define due to the heterogeneity of studies that have considered different aspects of brain damage. Overall, cerebellar FC alterations in patients with RR MS or secondary progressive (SP) MS are related to structural damage, either at the supratentorial [18] or infratentorial level [17], although cerebellar functional rearrangement may be partially independent of cerebellar structural damage [15,20].

To the best of our knowledge, FC alterations of cerebellar motor and cognitive domains (e.g., smCb and cCb) and their relationship with brain structural damage have not been investigated in MS patients with no disability according to the Expanded Disability Status Scale (EDSS).

We hypothesized that sensorimotor and cognitive domains modify their FC patterns in response to brain damage, even in the absence of disability. We also hypothesized that cerebellar FC alterations may help to understand the contradictory relationship between clinical and radiological features in MS (i.e., a lack of significant symptoms despite structural brain damage) [22]. To test our hypothesis, we evaluated the link between smCb and cCb FC and structural damage burden in a large series of patients with MS and no disability. Specifically, we applied a seed-based approach to study the FC of both cerebellar domains, and we correlated cerebellar FC with various conventional magnetic resonance imaging (MRI) measures of brain damage.

METHODS

Population

Patients were retrospectively selected from the Italian Neuroimaging Network Initiative (INNI) database, which currently includes four Italian MS centers (San Raffaele Scientific Institute, Milan, Center A; Second University of Naples, Naples, Center B; Sapienza University of Rome, Rome, Center C; and University of Siena, Siena, Center D; https://database.inni-ms.org/https://database.inni-ms.org [23]).

Inclusion criteria were diagnosis of clinically defined MS according to revised McDonald criteria [24], RR form, clinical history included in the database, and an EDSS score ≤1.5. From the INNI database, we also selected healthy controls (HCs) who were comparable with the patient sample in terms of age and sex.

Study protocols were approved by the ethics committee of the institution where acquisitions were performed, and both patients and HCs signed a written informed consent form. All images were anonymized prior to being uploaded to the database to protect subjects' privacy.

MRI acquisition and analysis

MRI scans were collected from the online INNI repository and acquired between 2008 and 2017. All MRI scans were acquired using 3.0T scanners with multimodal acquisitions including three-dimensional (3D) T1-weighted images (3DT1), proton-density/T2-weighted images, and resting-state functional images. Inclusion criteria for fMRI images were repetition time (TR) =3000 ms, a minimum of 140 volumes, and the absence of artifacts or movement at quality control. Details regarding acquisition protocols for separate centers are available in Table S1.

Structural and fMRI images were preprocessed following standard pipelines implemented with FMRIB's Software Library (FSL) version 6.0.3 (https://fsl.fmrib.ox.ac.uk/fsl/fslwiki/).

Structural MRI

T2-hyperintense white matter (WM) lesions were segmented on proton-density images at each site using a semiautomated technique (Jim, Xinapse System; http://www.xinapse.com) and global WM lesion load (T2LL) was calculated. On the preprocessed 3DT1 images [25] of each subject, we calculated mean cortical thickness via SPM CAT12 (http://www.neuro.uni-jena.de/cat/). The extracted brains were segmented into GM, WM, and cerebrospinal fluid (CSF) via FSL FAST, and whole brain, WM, and cortical GM measures were estimated using FSL SIENAX. Cerebellar volume was obtained as sum of cerebellar lobules and vermis (SUIT, http://www.diedrichsenlab.org/imaging/suit.htm). The Diedrichsen atlas [26] was used to create masks of the cCb (lobules VI–VII and IX–X) and smCb (lobules

I–V and VIII) [4,15]. FSL FIRST was used for segmentation and to calculate caudate, putamen, and thalamic volume. For each subcortical structure, the left and right volumes were summed. Structural data processing is more extensively described in the Supplementary Materials.

WM, cortical GM, caudate, putamen, thalamic, and cerebellar volumes were normalized for skull size using the estimated scaling factor obtained with SIENAX. In the following analyses, we used the inverse of volumes as indices of volume loss, together with T2LL, to obtain consistent data distribution and the same direction for all structural measures (the higher the values, the higher the structural decay).

Functional MRI

Preprocessing of functional data included removal of the first three volumes to allow the signal to reach equilibrium, movement correction with ICA Automatic Removal of Motion Artifacts, further movement and artifact correction via WM and CSF signal regression, application of a band-pass filter [0.008–0.09 Hz] to exclude physiological artifacts, and spatial smoothing using an 8-mm full-width at half-maximum Gaussian kernel. In each subject, functional images were registered onto anatomical 3DT1 images and standard Montreal Neurological Institute (MNI) space via a two-step linear/nonlinear procedure with FSL's FLIRT and FNIRT, respectively.

We performed seed-based analysis using FSL FEAT. In standard MNI space, mean smCb and cCb time series were extracted from each subject mask and used as seeds in the relative analysis. Visual inspection of the correct overlap of smCb or cCb and functional images was performed for all subjects [18]. Voxel-wise maps of FC were individually calculated between each seed and the rest of the brain separately via a general linear model (GLM).

Statistical analysis

All steps described are schematically displayed in Figure 1. Given the high variance observed in the FC of patients scoring ≤1.5 on the EDSS [19], we randomly divided patients into two subgroups of 72 subjects each (MS1 and MS2) to verify the reproducibility of results. We verified that groups were matched for age and sex and investigated differences in cortical thickness and WM, cortical GM, caudate, putamen, thalamic, and cerebellar volumes between the two subgroups. Then, for both the smCb and cCb, we calculated the voxel-wise maps of altered FC in the MS1 and MS2 groups as compared to HCs and created masks of significant difference (alteration masks). We combined the masks of differences obtained from the MS1 and MS2 groups for each cerebellar domain and identified areas where both subgroups had altered FC with respect to HCs to obtain one intersection mask. Lastly, we compared the intersection masks derived from the two subgroups with the cerebellar FC maps obtained by comparing the whole group of patients and HCs to verify the consistency of FC alterations in patients despite FC variance.

Group differences

Unless stated otherwise, statistical tests were performed using MATLAB 2017b (https://it.mathworks.com/). To compare MS1 versus MS2 and both MS1 and MS2 versus HCs, the Student t test assuming two tails and unequal variance was used in age analysis, the χ^2 test was used for sex analysis, and a one-way analysis of covariance was performed to test differences in cortical thickness and whole brain, WM, cortical GM, caudate, putamen, thalamic, and cerebellar volumes. Age, sex, and the MRI center of acquisition were covariates of no interest.

Z maps of smCb and cCb FC from the GLM were compared voxel-wise between MS1 and MS2 and HCs, and between the whole group of patients and HCs. Age, sex, whole brain volume, and the center of MRI acquisition were covariates of no interest.

Regression analysis

The role of structural features in explaining the association between altered cerebellar FC and structural involvement was evaluated in patients with a two-step procedure. First, in the whole sample of patients, areas associated with structural measures were identified via voxel-wise multivariate regression between altered smCb or cCb FC and the inverse of WM, cortical GM, caudate, putamen, thalamic, and cerebellar volumes, in addition to T2LL. This study aimed to investigate the relationship between cerebellar functional connectivity and structural damage both at the global level and limited to regions known to be involved early by MS damage (i.e., thalamus, caudate, putamen, and cerebellum). Although the primary motor cortex has a specific relevance for physical disability, it has not been found to be consistently involved in early MS. Furthermore, this study considered measures of global cortical volume loss and thinning not of specific cortical regions, also to avoid a too large number of variables. Age, sex, and the MRI center of acquisition were covariates of no interest. For both smCb and cCb FC, two masks were created by including all voxels covering areas of either increased or decreased FC that was significantly associated with structural measures (association masks). Within these masks, we calculated the average FC and obtained four values for each patient: decreased and increased smCb FC and decreased and increased cCb FC. Second, to find the best predictors of FC alterations, we performed stepwise regressions including each of the four FC values as dependent variables and all measures of structural damage, namely T2LL and WM, cortical GM, thalamic, caudate, putamen, and cerebellar inverse volumes, as independent variables (Figure 1).

Both voxel-wise group differences and multivariate regression analyses were performed nonparametrically (FSL's Randomise, 5000 permutations), and the significance level was set at $p < 0.05$ after

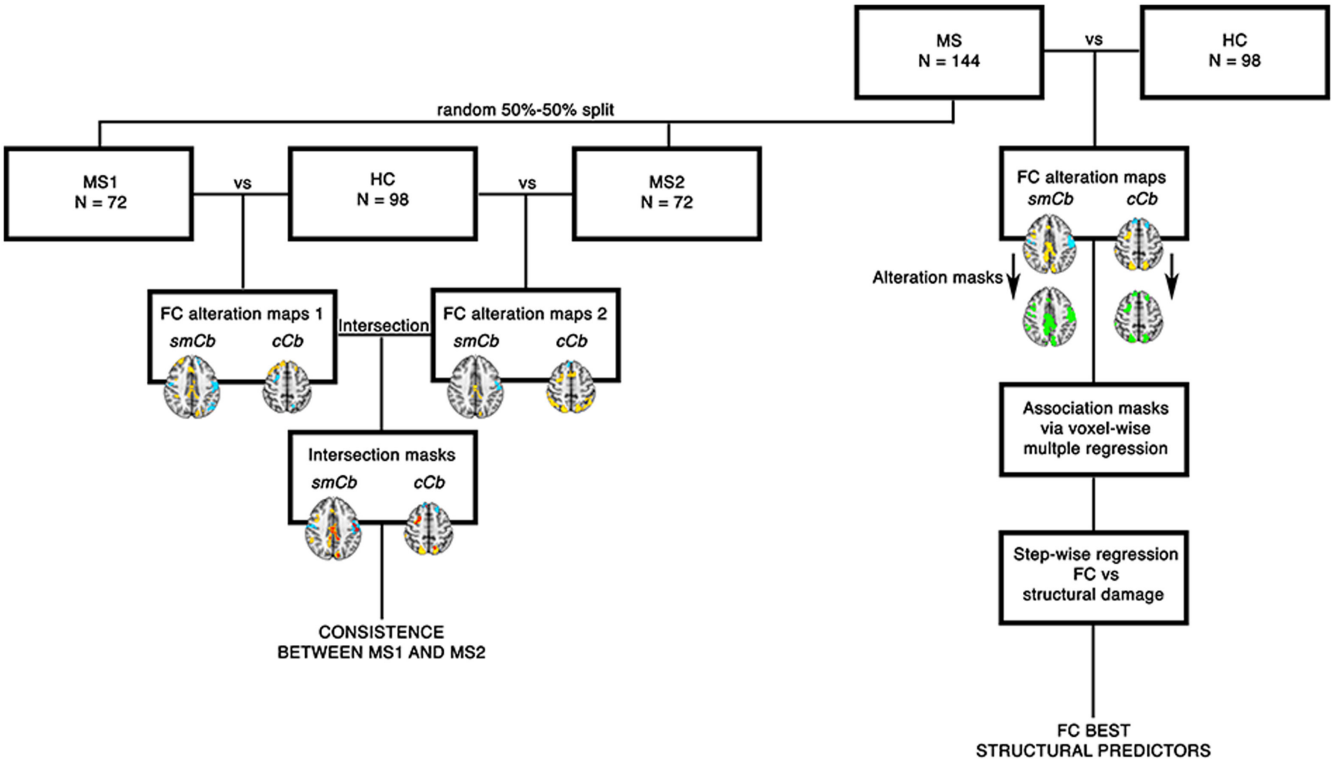

FIGURE 1 Flowchart of methods. Left side of panel: From a sample of 144 patients with multiple sclerosis (MS) and no disability, we randomly obtained two subgroups of 72 subjects each (MS1 and MS2). For both the sensorimotor cerebellum (smCb) and cognitive cerebellum (cCb), we calculated voxel-wise maps of altered functional connectivity (FC) in MS1 and MS2 subgroups versus healthy controls (HCs) (alteration masks 1 and 2, increased FC is depicted in yellow and decreased FC in light blue) and intersected the two resulting maps to create masks of significant difference (intersection masks, intersecting areas are shown in red). Then, we compared the intersection masks derived from the two subgroups with the cerebellar FC maps obtained by comparing the whole group of patients and HCs to verify the consistency of FC alterations in patients despite FC variances. Right side of panel: For both smCb and cCb, we calculated FC alterations in 144 patients as compared with 98 HCs and from the areas of significant alterations (alteration map, increased FC is depicted in yellow and decreased FC in light blue), in terms of either increased or decreased FC, we created an alteration mask (shown in green). Within the areas covered by the alteration mask, we calculated voxel-wise multiple regression between the smCb and cCb and structural measures, such as cortical gray matter, white matter, caudate, putamen, thalamic, and cerebellar inverse volumes, and lesion load. We created an association mask from the areas where FC with either the smCb or cCb was significantly associated with structural measures. Lastly, average smCb or cCb FC within the areas covered by the association mask was associated with the structural measure via stepwise regression to find the best FC alteration predictors [Colour figure can be viewed at wileyonlinelibrary.com]

false discovery rate correction, with minimum cluster extent set at 150 voxels.

RESULTS

From the INNI database, exams of 242 subjects were suitable for the study. A flowchart of the sample selection is displayed in Figure 2. Selected patients (n = 144) were aged 33.95 ± 9.20 years (106 females aged 34.49 ± 9.31 years, 38 males aged 32.45 ± 8.82 years). HCs (n = 98) were aged 35.26 ± 12.3 years (61 females aged 36.36 ± 12.37 years, 37 males aged 33.43 ± 12.13 years).

No patients had relapses or changes in disease-modifying therapy within 1 month prior to MRI acquisition. Demographic and clinical characteristics of patients, both as a whole group and as MS1 and MS2 subgroups, and HCs are summarized in Table 1.

Of the 144 patients of the final sample, EDSS score of the cerebellar functional system was equal to 1 in 21 patients and equal to 0 in the remaining 123 patients, indicating that most patients (85%) had no cerebellar signs at neurological evaluation. Patients had minimal signs on functional subscales and no clinical symptoms; the number of patients with abnormal neurological signs on each of the EDSS subscales is shown in Table S2.

One hundred twenty-eight patients were examined with a cognitive test, the Paced Auditory Serial Addition Task (PASAT) 3s and/or the Symbol Digit Modalities Test (SDMT), corrected by scholarity, and evaluated with respect to normative values [27]. Eighty-one patients were administered both the PASAT and SDMT, and six (7%) scored less than the cognitive impairment threshold on both tests, whereas 14 (17%) scored less than the cognitive impairment threshold on one test. Of the other 47 patients, 43 were examined with the PASAT and four with the SDMT, and 10 (21%) scored less than the cognitive impairment threshold.

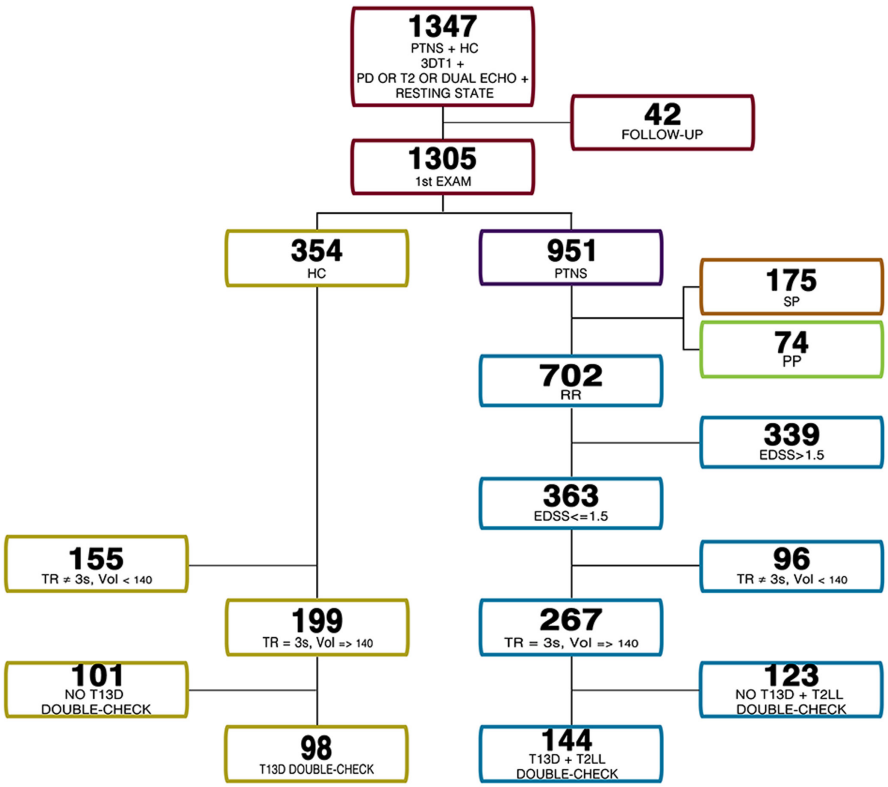

FIGURE 2 Flowchart of sample selection. Out of 1347 records, 1305 were first exams, including three-dimensional T1-weighted (3DT1), proton density (PD) or T2-weighted or dual echo and resting state functional images, of 951 patients (PTNS) with multiple sclerosis (702 relapsing–remitting [RR], 174 secondary progressive [SP], 74 primary progressive [PP]) and 354 healthy controls (HCs). In the RR group, 363 patients had an Expanded Disability Status Scale (EDSS) score of ≤1.5, and 267 underwent a resting-state acquisition with repetition time (TR) = 3 s and at least 140 volumes. Of these, 144 patients had 3DT1 images and T2 lesion load (T2LL) masks preprocessed and double checked by either Center A or C and were thus included in the following analysis. Among HCs, 199 had TR = 3 s and at least 140 volumes, and 98 had 3DT1 images preprocessed and double checked by either Center A or C and were included in the study [Colour figure can be viewed at wileyonlinelibrary.com]

Seventy-seven patients were treated with first-line therapies, including interferon, glatiramer acetate, teriflunomide, and dimethyl fumarate; 21 with second-line therapies, including fingolimod and natalizumab; and 46 were untreated.

MRI findings

Structural measures

Brain structural MRI measures of MS patients and HCs are shown in Table 2. All parameters were comparable between MS1 and MS2. Compared to HCs, patients had a reduction in WM, thalamic, and caudate volumes, both when considered as a whole group and as subgroups. Whole brain and putamen volumes were reduced in the patient group as a whole and in MS1. Mean cortical thickness and cortical GM and cerebellar volumes did not differ between patients and HCs.

Resting state FC alterations

Preliminary steps of our analysis evaluated the consistency of FC differences between the two patient subgroups versus HCs. For both the smCb and cCb, the voxel-wise maps of increased and decreased FC obtained by comparing MS1 and MS2 with HCs (Figures S1 and S2) were combined in intersection masks to identify areas of common FC alterations in the two subgroups. These intersection masks were then superimposed onto the maps of FC alterations obtained in the whole patient group (Figure 3). Because of the large overlap between areas of functional alterations in both the smCb and cCb in MS1 and MS2 that largely coincided with the pattern observed in the patient group as a whole, the following analyses were performed on the patient group as a whole.

Compared with HCs, patients with MS showed areas of significantly decreased smCb FC with the bilateral pre- and postcentral cortex, insula, basal ganglia, temporal cortex, and right lingual gyrus. Patients also showed increased smCb FC with the cerebellum, prefrontal cortex, cingulatum/paracingulum, precuneus, and posterior parietal cortex (Figure 3a). Furthermore, in respect to HCs, the patient group as a whole showed decreased cCb FC with the cerebellum, bilateral prefrontal cortex, precuneus, and angular gyri, and with the left insula and basal ganglia, as well as increased cCb FC with the cerebellum, bilateral orbitofrontal cortex, occipital cortices, precuneus, posterior parietal cortex, and right prefrontal cortex (Figure 3b).

TABLE 1 Demographic and clinical characteristics of MS patients and healthy controls

					t-value /χ^2 (*p* value)	
	Patients	MS1	MS2	Controls	Patients vs. controls	MS1 vs. MS2
No. of subjects	144	72	72	98	NA	NA
Sex (female/male)	106/38	52/20	54/18	61/37	3.52 (0.06)	0.03 (0.86)
Age, years	33.95 (9.2)	33.64 (9.68)	34.26 (8.75)	35.26 (12.3)	1.97 (0.35)	−0.41 (0.69)
Disease duration, years	6.58 (5.13)	6.73 (4.79)	6.43 (5.48)	NA	NA	0.33 (0.74)
EDSS, median [range]	1.5 [0.0–1.5]	1.5 [0.0–1.5]	1.5 [0.0–1.5]	NA	NA	0 (1)
PASAT 3s	41.11 (11.16)	42.38 (10.06)	39.89 (12.08)	NA	NA	1.25 (0.22)
SDMT	48.67 (10.88)	48.76 (11.79)	48.55 (9.60)	NA	NA	0.09 (0.93)

Note: Data are shown as mean (standard deviation) unless indicated otherwise. Group differences were tested via unpaired two-sample *t* test, with the exception of gender analysis, which was performed with the χ^2 test. No significant differences in age or sex were found between either MS1 or MS2 subgroups and controls. One hundred twenty-four patients (61 MS1 and 63 MS2) were examined with PASAT 3s, and 85 patients (50 MS1 and 35 MS2) were examined with SDMT.

Abbreviations: EDSS, Expanded Disability Status Scale; MS, multiple sclerosis; NA, not applicable; PASAT 3s, Paced Auditory Serial Addition Task at 3 s; SDMT, Symbol Digit Modalities Test.

Structural correlates of FC

We found that various areas of either increased or decreased FC were significantly associated with brain structural measures in the patient group as a whole. Voxel-wise multivariate regression showed a negative association between smCb FC and all structural measures in areas of both increased FC, (i.e., prefrontal cortex, cingulum/paracingulum, and precuneus) and decreased FC (i.e., the insula and precentral gyrus) (Figure 4a). In addition, we found a negative association between increased cCb FC with the right precuneus and all structural measures (Figure 4b). Lastly, stepwise regression showed that of all structural measures, WM inverse volume, an index of volume loss, was the best predictor of a negative association between structural damage and decreased smCb FC ($\beta = -502.76$, $p < 0.002$; Figure S3A). Cortical GM inverse volume, an index of volume loss, was the best predictor of a negative association between structural measures and increased FC of both the smCb ($\beta = -594.10$, $p < 0.001$; Figure S3B) and cCb ($\beta = -592.82$, $p < 0.03$; Figure S3C).

DISCUSSION

To investigate the contradictory relationships between clinical and radiological features in MS patients with no disability, we evaluated the association between sCb and cCb FC and the burden of structural damage in 144 patients with RR MS and an EDSS score ≤1.5. We found that whole brain, WM, caudate, putamen, and thalamic volumes were reduced. Cerebellar FC of the two cerebellar domains was altered, and both increased and decreased cerebellar FC was negatively associated with structural measures, indicating that the lower the FC, the greater the tissue loss. Lastly, among multiple structural measures, cortical GM and WM volumes were the best predictors of cerebellar FC alterations.

Structural damage

Whole brain, WM, caudate, putamen, and thalamic volumes were reduced with respect to controls, consistent with previous MRI data, indicating that brain structural decline starts in early phases of MS [28].

The role of atrophy measures in the prognosis of patients with MS [29] and the early occurrence of both WM and GM loss in MS [30] are well known. Brain atrophy has been found to be closely related to disability [31]. A large multicenter study demonstrated that lower deep GM and cortical volumes at baseline correlated with higher EDSS scores in all MS phenotypes [11]. A relationship between early brain structural damage and disability progression has also been described [32,33]. However, our study showed a dissociation between structural damage and physical disability, in accordance with volumetric MRI studies indicating the occurrence of brain atrophy even before the disease becomes symptomatic [34,35].

Cerebellar functional alterations

We found a widespread pattern of FC alterations between the two cerebellar domains and several brain regions, including areas of both increased and decreased FC. These results are in agreement with previous studies showing that the dentate nucleus, the main output structure of the neocerebellum, is more functionally connected with some brain areas and less connected with others in patients with MS compared to HCs [16,18,36]. In the present study, FC alterations mirror what has previously been observed in patients with MS and a large range of disability (e.g., EDSS score between 0 and 7.5) [15]. We found that both the smCb and cCb were less functionally connected with the insula and basal ganglia. The insular cortex interconnects several networks and contributes

TABLE 2 Brain structural magnetic resonance imaging measures of MS patients and healthy controls

					F value (*p*-value)			
	Patients	MS1	MS2	Controls	MS1 vs. MS2	Patients vs. controls	MS1 vs. controls	MS2 vs. controls
Cortical thickness, mm	2.56 (0.24)	2.52 (0.27)	2.59 (0.21)	2.52 (0.20)	3.09 (0.08)	0.78 (0.34)	0.17 (0.68)	3.35 (0.07)
Brain volume, ml	1494.10 (133.0)	1483.70 (122.69)	1504.50 (142.66)	1533.11 (124.96)	1.15 (0.29)	**5.06 (0.03)**	**5.30 (0.02)**	0.79 (0.38)
Cortical GM volume, ml	578.82 (67.45)	568.99 (63.92)	588.66 (69.85)	577.87 (69.40)	3.19 (0.08)	0.20 (0.65)	1.46 (0.23)	0.23 (0.63)
WM volume, ml	753.73 (98.25)	757.27 (92.45)	750.19 (104.25)	807.37 (70.54)	0.05 (0.83)	**12.84 (<0.001)**	**9.32 (0.003)**	**8.04 (0.005)**
Caudate volume, ml	9.04 (1.45)	8.97 (1.22)	9.11 (1.65)	9.44 (1.37)	0.20 (0.65)	**8.49 (0.004)**	**7.17 (0.008)**	**3.87 (0.05)**
Putamen volume, ml	11.87 (1.82)	11.61 (1.43)	12.12 (2.13)	12.21 (1.86)	2.67 (0.11)	**4.93 (0.03)**	**6.01 (0.02)**	0.91 (0.34)
Thalamic volume, ml	19.10 (2.55)	19.16 (2.30)	19.06 (27.84)	20.5 (2.4)	0.07 (0.78)	**22.40 (<0.001)**	**14.45 (<0.001)**	**14.64 (<0.001)**
Cerebellar volume, ml	174.46 (16.09)	173.49 (12.00)	175.44 (19.38)	179.13 (30.22)	0.41 (0.53)	1.53 (0.22)	2.07 (0.15)	0.81 (0.37)
T2LL, ml	4.67 (5.37)	4.94 (5.07)	4.40 (5.69)	NA	0.38 (0.54)	NA	NA	NA

Note: Data are shown as mean (standard deviation). Feature differences between groups were calculated via one-way analysis of covariance, including age, sex, and site as covariates of no interest. Significant group differences are reported in bold fonts ($p<0.05$).

Abbreviations: GM, gray matter; MS, multiple sclerosis; NA, not applicable; T2LL, lesion load; WM, white matter.

to motor, cognitive, and emotional functions [37]. Similarly, basal ganglia are interconnected with the cerebellum in the cortico–cerebellar–basal ganglia pathway, which integrates basal ganglia and cerebellar functions in both motor and nonmotor domains [38]. Furthermore, smCb FC with the precentral cortex and cCb FC with the associative cortex were also reduced. The precentral cortex is involved in executing voluntary motor movements and is structurally connected to the cerebellum [39]. Interactions between the cerebellum and associative prefrontal and parietal cortices are involved in highly integrated cognitive functions [40]. Future longitudinal studies could support the hypothesis that the decrement in smCb FC with the insula, basal ganglia, and precentral gyrus, and the decrement in cCb FC with the insula, basal ganglia, and associative cortex are precursors of subsequent motor and cognitive disability, respectively.

Conversely, FC of both the smCb and cCB with the precuneus, prefrontal, and parietal cortices, as well as with some cerebellar areas, was increased, although to a different extent. SmCb also showed increased FC with the cingulum/paracingulum, whereas cCb also showed increased FC with the orbitofrontal cortex. Increased FC in patients without disability may play an adaptive/compensatory role as a neuroplastic mechanism to limit the effect of structural damage [41], though this hypothesis is debated [42].

Previous fMRI studies found an association between cerebellar FC and disability in RR MS and SP MS, suggesting that functional alterations of the cerebellum impact clinical status: dentate FC with the caudate nucleus was associated with balance disturbance [16], whereas smCb and cCb FC were significantly associated with physical and cognitive disability [15], and decreased local FC in the cerebellum correlated with disability and ataxia scores [17]. Our results expand these previous results by indicating that functional cerebellar alterations may occur even in patients with MS who do not present relevant physical and cognitive impairment.

Association between structural damage and functional alterations

For both cerebellar functional domains, FC was negatively associated with structural measures, as considered altogether, indicating that the lower the FC, the greater the lesion burden and volume loss. In our sample of patients with no disability, the best predictors of altered cerebellar FC were WM and cortical GM volume loss. Particularly, WM volume loss predicted decreased FC of the smCb, whereas cortical GM volume loss predicted increased FC of both the smCb and cCb. Neither T2LL nor thalamic, caudate, putamen, or cerebellar volume loss accounted for cerebellar FC alterations.

Few studies have investigated the relationships between altered cerebellar FC and brain structural damage in disabled patients with RR MS or SP MS, and reported an association between the two measures [15,17,18,20]. The novel finding of this study was that structural brain damage was negatively associated with cerebellar FC in

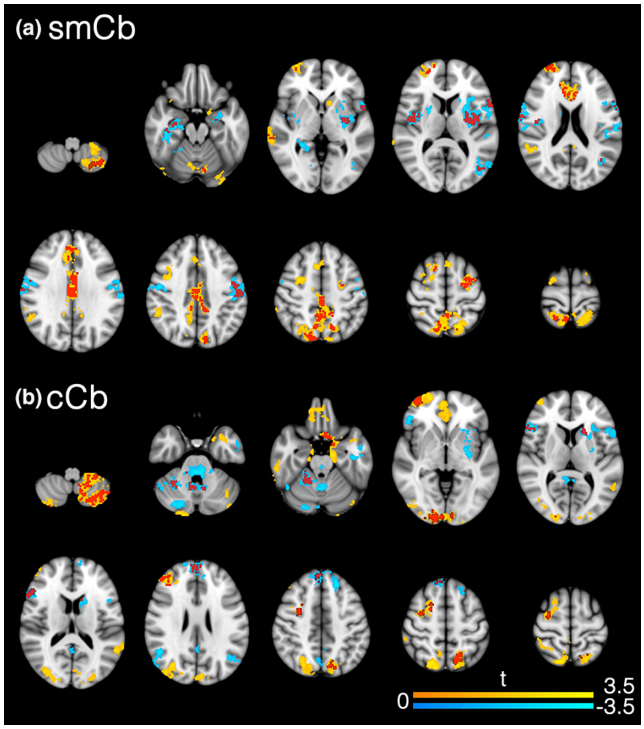

FIGURE 3 Two-sample *t* test. Comparison of resting-state functional connectivity (FC) of the sensorimotor cerebellum (smCb) (a) and cognitive cerebellum (cCb) (b) between the entire group of patients with multiple sclerosis and healthy controls (HCs). Yellow areas indicate where FC was significantly higher in patients than in HCs, and light blue areas indicate where FC was significantly lower in patients than in HCs. Statistical significance was reached if $p < 0.05$, false discovery rate–corrected. Superimposed onto the result of the two-sample *t* test, combined binary masks of smCb and cCb FC obtained by the intersection of MS1 patients versus HCs and MS2 patients versus HCs are shown in red [Colour figure can be viewed at wileyonlinelibrary.com]

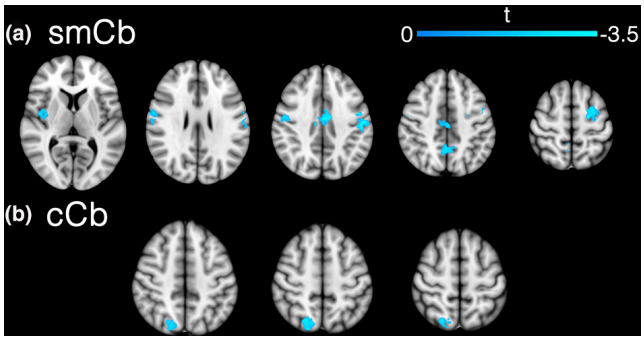

FIGURE 4 Relation between structural damage and functional connectivity (FC) of the sensorimotor cerebellum. In patients with multiple sclerosis, FC between (a) the sensorimotor cerebellum (smCb) and the frontal lobe, bilateral insulae, primary somatosensory cortex, and precuneus decreases as structural damage increases and (b) the cognitive cerebellum (cCb) and precuneus. Negative associations are shown in blue/light blue. Significant results were reached if $p < 0.05$, false discovery rate–corrected [Colour figure can be viewed at wileyonlinelibrary.com]

nondisabled MS patients, regardless of whether FC was increased or decreased. WM volume loss could be considered an indirect indicator of demyelination and nerve cell loss [43], and an association between WM volume loss and microstructural WM damage has been described in MS [44]. Our findings thus suggest that the loss of WM fiber integrity influences neuronal functioning, consistent with the concept that structural connectivity represents the skeleton through which functional connections run. Furthermore, the role of cortical GM volume as a predictor of increased FC of both cerebellar domains suggests that cortical volume represents the framework for FC to increase, in the absence of atrophy, intended as significantly reduced volume in respect to HCs.

Limitations

One limitation of our study is its cross-sectional nature, which prevented evaluation of the role of FC alterations in disease course in MS patients without disability. Second, we only considered macrostructural measures (i.e., brain volume and WM lesion load), whereas microstructural measures were not assessed due to MRI data availability in a multicenter repository. Lastly, even though treatment was not homogeneous among patients, all patients were in a stable, nonacute disease phase.

CONCLUSIONS

Our data indicate that mechanisms of both increased and decreased cerebellar FC coexist in patients with MS and no disability. Moreover, the relationship between functional and structural alterations suggests that cerebellar FC decreases in association with WM loss, whereas cerebellar FC increases in relation to the amount of cortical GM, in the absence of cortical GM atrophy. Due to the cross-sectional nature of this study, we could not definitively establish whether FC alterations limit the clinical impact of structural damage or whether a cause-and-effect relationship exists between FC alterations and clinical status. Longitudinal studies on large samples of MS patients with no or mild disability may help to better understand the clinical role of cerebellar FC alterations and, particularly, whether these alterations underpin a preserved clinical status despite brain structural damage.

ACKNOWLEDGMENTS

This project has been supported by a research grant from the Fondazione Italiana Sclerosi Multipla (FISM2019/S/3), and financed or cofinanced with the “5 per mille” public funding. Open Access Funding provided by Universita degli Studi di Roma La Sapienza within the CRUI-CARE Agreement.

INNI network: Rome: Nikolaos Petsas, Serena Ruggieri, Claudia Piervincenzi; Milan: Paola Valsasina, Mauro Sibilia, Paolo Preziosa, Loredana Storelli; Naples: Antonio Gallo, Alvino Bisecco, Alessandro d'Ambrosio; Siena: Maria Laura Stromillo, Riccardo Tappa Brocci.

CONFLICT OF INTEREST

S.T., V.I. and C.G. have nothing to disclose. M.A.R. received speaker honoraria from Bayer, Biogen Idec, Celgene, Genzyme, Merck Serono, Novartis, Roche, and Teva, and receives research support from the MS Society of Canada and Fondazione Italiana Sclerosi Multipla. N.P. received speaker fees from Biogen and mission support from Genzyme and Novartis. G.T. received funding for travel, speaking honorarium, consulting service, and research projects from Novartis, Genzyme, Teva, Merck, Biogen, Roche, Allergan, Abbvie, Lilly, and Mylan. N.D.S. has received honoraria from Biogen-Idec, Celgene, Immunic, Merck Serono, Novartis, Roche, Sanofi-Genzyme, and Teva for consulting services, speaking, and travel support. He serves on advisory boards for Biogen-Idec, Immunic, Merck Serono, Novartis, Roche, and Sanofi-Genzyme. He has received research grant support from the Italian Multiple Sclerosis Society. C.P. received consulting and lecture fees from Sanofi-Aventis, Biogen Idec, Bayer Schering, Merck Serono, and Novartis. He also received research funding from Novartis, Sanofi-Aventis, Merck Serono, and Bayer Schering. M.F. is Editor-in-Chief of the *Journal of Neurology*; received compensation for consulting services and/or speaking activities from Bayer, Biogen Idec, Merck-Serono, Novartis, Roche, Sanofi Genzyme, Takeda, and Teva Pharmaceutical Industries; and receives research support from Biogen Idec, Merck-Serono, Novartis, Roche, Teva Pharmaceutical Industries, Italian Ministry of Health, Fondazione Italiana Sclerosi Multipla, and ARiSLA (Fondazione Italiana di Ricerca per la SLA). P.P. received funding for travel from Novartis, Genzyme, and Bracco and a speaking honorarium from Biogen. She received research support from the Italian Ministry of Foreign Affairs and Fondazione Italiana Sclerosi Multipla.

AUTHOR CONTRIBUTIONS

Silvia Tommasin: Conceptualization (lead), formal analysis (equal), methodology (lead), software (lead), writing–original draft (equal). **Viktoriia Iakovleva:** Conceptualization (supporting), formal analysis (equal), methodology (supporting), writing–original draft (equal). **Maria Assunta Rocca:** Funding acquisition (lead), project administration (equal), resources (equal), writing–review & editing (equal). **Costanza Giannì:** Conceptualization (supporting), data curation (equal), writing–review & editing (equal). **Gioacchino Tedeschi:** Funding acquisition (lead), project administration (equal), resources (equal), writing–review & editing (equal). **Nicola De Stefano:** Funding acquisition (lead), project administration (equal), resources (equal), writing–review & editing (equal). **Carlo Pozzilli:** Funding acquisition (equal), resources (equal), supervision (supporting), writing–review & editing (equal). **Massimo Filippi:** Funding acquisition (lead), project administration (equal), resources (equal), writing–review & editing (equal). **Patrizia Pantano:** Conceptualization (equal), funding acquisition (lead), project administration (equal), resources (equal), supervision (lead), writing–original draft (supporting).

DATA AVAILABILITY STATEMENT

The data that support the findings of this study are available on request from the corresponding author. The data are not publicly available due to privacy or ethical restrictions.

ORCID

Silvia Tommasin https://orcid.org/0000-0001-9088-7968
Maria Assunta Rocca https://orcid.org/0000-0003-2358-4320
Costanza Giannì https://orcid.org/0000-0002-4018-169X
Gioacchino Tedeschi https://orcid.org/0000-0002-3321-1125
Carlo Pozzilli https://orcid.org/0000-0002-6360-4798
Massimo Filippi https://orcid.org/0000-0002-5485-0479
Patrizia Pantano https://orcid.org/0000-0001-9659-8294

REFERENCES

1. Timmann D, Drepper J, Frings M, et al. The human cerebellum contributes to motor, emotional and cognitive associative learning. A review. *Cortex*. 2010;46:845-857. doi:10.1016/j.cortex.2009.06.009
2. Jissendi P, Baudry S, Balériaux D. Diffusion tensor imaging (DTI) and tractography of the cerebellar projections to prefrontal and posterior parietal cortices: a study at 3T. *J Neuroradiol*. 2008;35:42-50. doi:10.1016/j.neurad.2007.11.001
3. Palesi F, Tournier J-D, Calamante F, et al. Contralateral cerebello-thalamo-cortical pathways with prominent involvement of associative areas in humans in vivo. *Brain Struct Funct*. 2015;220:3369-3384. doi:10.1007/s00429-014-0861-2
4. Stoodley CJ, Valera EM, Schmahmann JD. Functional topography of the cerebellum for motor and cognitive tasks: an fMRI study. *NeuroImage*. 2012;59:1560-1570. doi:10.1016/j.neuroimage.2011.08.065
5. Mormina E, Petracca M, Bommarito G, et al. Cerebellum and neurodegenerative diseases: beyond conventional magnetic resonance imaging. *World J Radiol*. 2017;9:371-388. doi:10.4329/wjr.v9.i10.371
6. Cocozza S, Petracca M, Mormina E, et al. Cerebellar lobule atrophy and disability in progressive MS. *J Neurol Neurosurg Psychiatry*. 2017;88:1065-1072. doi:10.1136/jnnp-2017-316448
7. D'Ambrosio A, Pagani E, Riccitelli GC, et al. Cerebellar contribution to motor and cognitive performance in multiple sclerosis: an MRI sub-regional volumetric analysis. *Mult Scler*. 2017;23:1194-1203. doi:10.1177/1352458516674567
8. Ruggieri S, Bharti K, Prosperini L, et al. A comprehensive approach to disentangle the effect of cerebellar damage on physical disability in multiple sclerosis. *Front Neurol*. 2020;11:529. doi:10.3389/fneur.2020.00529
9. Parmar K, Fonov VS, Naegelin Y, et al. Regional cerebellar volume loss predicts future disability in multiple sclerosis patients. *Cerebellum*. 2021. doi:10.1007/s12311-021-01312-0. [Epub ahead of print].
10. Bergsland N, Horakova D, Dwyer MG, et al. Subcortical and cortical gray matter atrophy in a large sample of patients with clinically isolated syndrome and early relapsing-remitting multiple sclerosis. *AJNR Am J Neuroradiol*. 2012;33:1573-1578. doi:10.3174/ajnr.A3086
11. Eshaghi A, Prados F, Brownlee WJ, et al. Deep gray matter volume loss drives disability worsening in multiple sclerosis. *Ann Neurol*. 2018;83:210-222. doi:10.1002/ana.25145
12. Tao G, Datta S, He R, et al. Deep gray matter atrophy in multiple sclerosis: a tensor based morphometry. *J Neurol Sci*. 2009;282:39-46. doi:10.1016/j.jns.2008.12.035
13. Fox MD, Raichle ME. Spontaneous fluctuations in brain activity observed with functional magnetic resonance imaging. *Nat Rev Neurosci*. 2007;8:700-711. doi:10.1038/nrn2201
14. Tommasin S, Giannì C, De Giglio L, Pantano P. Neuroimaging techniques to assess inflammation in multiple sclerosis. *Neuroscience*. 2019;403:4-16. doi:10.1016/j.neuroscience.2017.07.055
15. Pasqua G, Tommasin S, Bharti K, et al. Resting-state functional connectivity of anterior and posterior cerebellar lobes

is altered in multiple sclerosis. *Mult Scler*. 2021;27(4):539-548. doi:10.1177/1352458520922770
16. Tona F, De Giglio L, Petsas N, et al. Role of cerebellar dentate functional connectivity in balance deficits in patients with multiple sclerosis. *Radiology*. 2018;287:267-275. doi:10.1148/radiol.2017170311
17. Dogonowski A-M, Andersen KW, Madsen KH, et al. Multiple sclerosis impairs regional functional connectivity in the cerebellum. *Neuroimage Clin*. 2014;4:130-138. doi:10.1016/j.nicl.2013.11.005
18. Sbardella E, Upadhyay N, Tona F, et al. Dentate nucleus connectivity in adult patients with multiple sclerosis: functional changes at rest and correlation with clinical features. *Mult Scler*. 2017;23:546-555. doi:10.1177/1352458516657438
19. Tommasin S, De Giglio L, Ruggieri S, et al. Relation between functional connectivity and disability in multiple sclerosis: a non-linear model. *J Neurol*. 2018;265:2881-2892. doi:10.1007/s00415-018-9075-5
20. Cocozza S, Pontillo G, Russo C, et al. Cerebellum and cognition in progressive MS patients: functional changes beyond atrophy? *J Neurol*. 2018;265:2260-2266. doi:10.1007/s00415-018-8985-6
21. Schoonheim MM, Douw L, Broeders TA, et al. The cerebellum and its network: disrupted static and dynamic functional connectivity patterns and cognitive impairment in multiple sclerosis. *Mult Scler*. 2021;27(13):2031–2039. doi:10.1177/1352458521999274
22. Barkhof F. The clinico-radiological paradox in multiple sclerosis revisited. *Curr Opin Neurol*. 2002;15:239-245.
23. Filippi M, Tedeschi G, Pantano P, et al. The Italian Neuroimaging Network Initiative (INNI): enabling the use of advanced MRI techniques in patients with MS. *Neurol Sci*. 2017;38:1029-1038. doi:10.1007/s10072-017-2903-z
24. Polman CH, Reingold SC, Banwell B, et al. Diagnostic criteria for multiple sclerosis: 2010 Revisions to the McDonald criteria. *Ann Neurol*. 2011;69:292-302. doi:10.1002/ana.22366
25. Storelli L, Rocca MA, Pantano P, et al. MRI quality control for the Italian Neuroimaging Network Initiative: moving towards big data in multiple sclerosis. *J Neurol*. 2019;266:2848-2858. doi:10.1007/s00415-019-09509-4
26. Diedrichsen J. A spatially unbiased atlas template of the human cerebellum. *NeuroImage*. 2006;33:127-138. doi:10.1016/j.neuroimage.2006.05.056
27. Amato MP, Portaccio E, Goretti B, et al. The Rao's Brief Repeatable Battery and Stroop Test: normative values with age, education and gender corrections in an Italian population. *Mult Scler*. 2006;12:787-793. doi:10.1177/1352458506070933
28. Battaglini M, Gentile G, Luchetti L, et al. Lifespan normative data on rates of brain volume changes. *Neurobiol Aging*. 2019;81:30-37. doi:10.1016/j.neurobiolaging.2019.05.010
29. Sastre-Garriga J, Pareto D, Battaglini M, et al. MAGNIMS consensus recommendations on the use of brain and spinal cord atrophy measures in clinical practice. *Nat Rev Neurol*. 2020;16:171-182. doi:10.1038/s41582-020-0314-x
30. Chard DT, Griffin CM, Parker GJM, et al. Brain atrophy in clinically early relapsing-remitting multiple sclerosis. *Brain*. 2002;125:327-337. doi:10.1093/brain/awf025
31. Bakshi R, Benedict RH, Bermel RA, Jacobs L. Regional brain atrophy is associated with physical disability in multiple sclerosis: semiquantitative magnetic resonance imaging and relationship to clinical findings. *J Neuroimaging*. 2001;11:129-136. doi:10.1111/j.1552-6569.2001.tb00022.x
32. Rojas JI, Murphy G, Sanchez F, et al. Thalamus volume change and cognitive impairment in early relapsing–remitting multiple sclerosis patients. *Neuroradiol J*. 2018;31:350-355. doi:10.1177/1971400918781977
33. Uher T, Krasensky J, Malpas C, et al. Evolution of brain volume loss rates in early stages of multiple sclerosis. *Neurol Neuroimmunol Neuroinflamm*. 2021;8:e979. doi:10.1212/NXI.0000000000000979
34. Amato MP, Hakiki B, Goretti B, et al. Association of MRI metrics and cognitive impairment in radiologically isolated syndromes. *Neurology*. 2012;78:309-314. doi:10.1212/WNL.0b013e31824528c9
35. De Stefano N, Giorgio A, Battaglini M, et al. Assessing brain atrophy rates in a large population of untreated multiple sclerosis subtypes. *Neurology*. 2010;74:1868-1876. doi:10.1212/WNL.0b013e3181e24136
36. Cirillo S, Rocca MA, Ghezzi A, et al. Abnormal cerebellar functional MRI connectivity in patients with paediatric multiple sclerosis. *Mult Scler*. 2016;22:292-301. doi:10.1177/1352458515592191
37. Uddin LQ, Nomi JS, Hébert-Seropian B, Ghaziri J, Boucher O. Structure and function of the human insula. *J Clin Neurophysiol*. 2017;34:300-306. doi:10.1097/WNP.0000000000000377
38. Bostan AC, Dum RP, Strick PL. Cerebellar networks with the cerebral cortex and basal ganglia. *Trends Cogn Sci*. 2013;17:241-254. doi:10.1016/j.tics.2013.03.003
39. Banker L, Tadi P. *Neuroanatomy, Precentral Gyrus*. In: StatPearls. StatPearls Publishing; 2021.
40. Koziol LF, Budding D, Andreasen N, et al. Consensus paper: the cerebellum's role in movement and cognition. *Cerebellum*. 2014;13:151-177. doi:10.1007/s12311-013-0511-x
41. Penner I-K, Aktas O. Functional reorganization is a maladaptive response to injury - NO. *Mult Scler*. 2017;23:193-194. doi:10.1177/1352458516679895
42. Rocca MA, Filippi M. Functional reorganization is a maladaptive response to injury – YES. *Multiple Sclerosis Journal*. 2017;23(2):191-193. doi:10.1177/1352458516667242
43. Meier-ruge W, Ulrich J, Brühlmann M, Meier E. Age-related white matter atrophy in the human brain. *Ann NY Acad Sci*. 1992;673:260-269. doi:10.1111/j.1749-6632.1992.tb27462.x
44. Deppe M, Marinell J, Krämer J, et al. Increased cortical curvature reflects white matter atrophy in individual patients with early multiple sclerosis. *Neuroimage Clin*. 2014;6:475-487. doi:10.1016/j.nicl.2014.02.012

SUPPORTING INFORMATION

Additional supporting information may be found in the online version of the article at the publisher's website.

Supplementary Material

How to cite this article: Tommasin S, Iakovleva V, Rocca MA, et al. Relation of sensorimotor and cognitive cerebellum functional connectivity with brain structural damage in patients with multiple sclerosis and no disability. *Eur J Neurol*. 2022;29:2036–2046. doi:10.1111/ene.15329

APPENDIX

INNI Network: Rome: Nikolaos Petsas (IRCCS NEUROMED, Pozzilli, Italy), Serena Ruggieri (Department of Human Neurosciences, Sapienza University of Rome, Rome, Italy, Neuroimmunology Unit, IRCSS Fondazione Santa Lucia, Rome, Italy), Claudia Piervincenzi (Department of Human Neurosciences, Sapienza University of Rome, Rome, Italy); Milan: Paola Valsasina (Neurology Unit, IRCCS San Raffaele Scientific Institute, Milan, Italy), Mauro Sibilia (Neurology Unit, IRCCS San Raffaele Scientific Institute, Milan, Italy), Paolo Preziosa (Neurology Unit, IRCCS San Raffaele Scientific Institute, Milan, Italy), Loredana Storelli (Neurology Unit, IRCCS San Raffaele Scientific Institute, Milan, Italy); Naples: Antonio Gallo (Department of Advanced Medical and Surgical Sciences and MRI-Center "SUN-FISM," University of Campania "Luigi Vanvitelli," Naples, Italy), Alvino Bisecco (Department of Advanced Medical and Surgical Sciences and MRI-Center "SUN-FISM," University of Campania "Luigi Vanvitelli," Naples, Italy), Alessandro d'Ambrosio (Department of Advanced Medical and Surgical Sciences and MRI-Center "SUN-FISM," University of Campania "Luigi Vanvitelli," Naples, Italy); Siena: Maria Laura Stromillo (Department of Medicine, Surgery and Neuroscience, University of Siena, Siena, Italy), Riccardo Tappa Brocci (Department of Medicine, Surgery and Neuroscience, University of Siena, Siena, Italy).



MANAGE-PD

Tool for Making Informed Decisions to **Aid Timely Management of Parkinson's Disease**



MANAGE-PD allows you to:

- Identify PD patients inadequately controlled on oral medications
- Determine which patients with PD may be adequately controlled on their current treatment regimen or may require changes to their treatment regimen

Scan the QR code to access to the web

Click here to access to the web

MANAGE-PD is an AbbVie Inc. registered Medical Device. It is a collaborative research and development effort between AbbVie Medical Affairs and Health Economics and Outcomes, the Parkinson's Foundation and an international panel of Movement Disorder Specialists.

©2022 AbbVie Inc. All rights reserved. The Parkinson's Foundation logo is the sole property of the Parkinson's Foundation used with written permission. Any use of the Parkinson's Foundation name or logo without Foundation permission is prohibited. All content in https://www.managepd.eu/ is intended only for informational use by healthcare professionals and is not offered as or intended to be medical advice for any particular patient. This information is not intended for patients. Only a healthcare professional exercising independent clinical judgement can make decisions regarding appropriate patient care and treatment options considering the unique characteristics of each patient.

PD: Parkinson´s Disease

Parkinson's Foundation

Veeva Code: ABBV-AA-00335-FM Approved: January 2022

abbvie